Stern, Curt Foot-focusing device for binocular. A special foot-focusing device for binoculars has been constructed by Bausch & Lomb, Rochester, N.Y. A simple system of levers connects a foot treadle with the focusing adjustment screw. It works with very little friction. This device proves highly useful whenever it is desired to use both hands for handling of the flies, e.g., in work with somatic segregation or in operative work with any object. The device can be adapted to different binoculars. The binocular used in Rochester is constructed, with certain changes, according to principles suggested by C. B. Bridges.

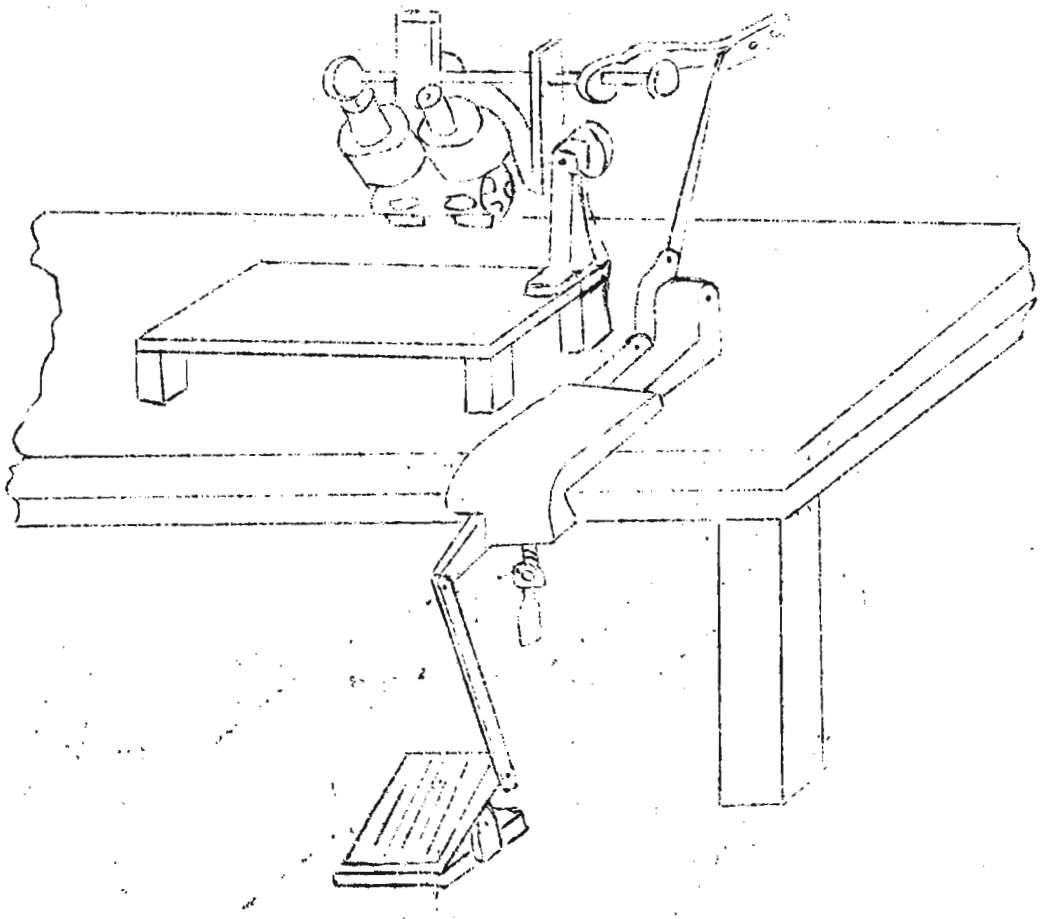

Oliver, C. P. A dry heat sterilizer for cotton plugs. Where sterilizing equipment is not handy or not available, a small dry-heat sterilizer can be made at little cost. Heat is supplied by a common electric hot-plate (600 watts). To keep the cotton from scorching and yet to keep most of the heat from being lost, put a ten-inch-deep bucket between the plate and the sterilizing chanber. The open end of the bucket should be placed on the plate and should have a diameter as large as that of the electric coil. A large hold should be cut into the bucket-

bottom, and it is better to have most of the hole covered with a strip of thin asbestos. Eight to ten small holes cut into the side of the bucket give the necessary circulation. A common, tin bread-box (10 x 12 inches) with the tip filled with numerous holes made with an ice pick serves as the sterilizing chamber. Cotton placed on the bottom of the box will scorch if the temperature goes too high. To eliminate this condition, cover the bottom of the chamber with a piece of thick (8 mm.) asbestos, supported at two ends by pieces of asbestos. Asbestos also lines the lower parts of the sides of the box, although this may not be necessary. Into a hole in the top of the box thrust a thermometer down into the mass of cotton. Heat easily reaches 65° C, and the cotton does not burn or scorch.